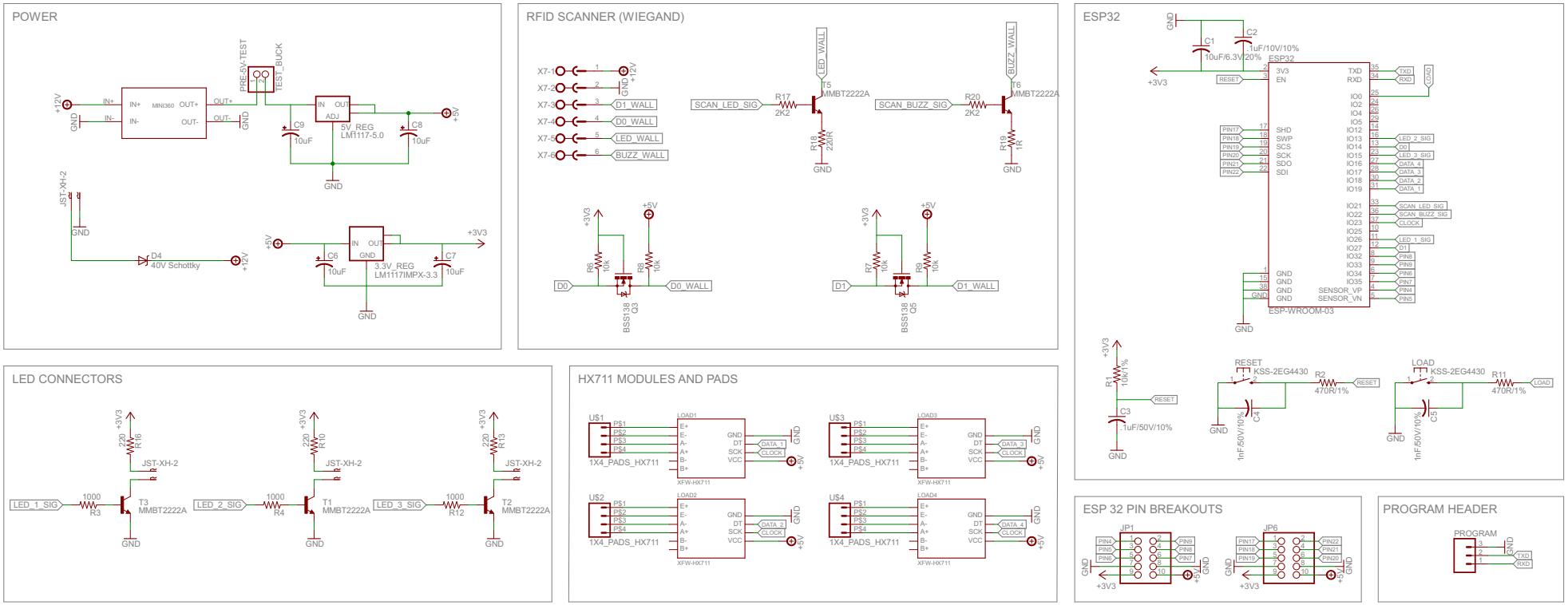
POWER
+12V
GND
IN+
IN-
MINI360
OUT+
OUT-
PRE-5V-TEST
TEST_BUCK
C9
10uF
5V_REG
LM1117-5.0
C8
10uF
+5V
JST-XH-2
D4
40V Schottky
+12V
C6
10uF
3.3V_REG
LM1117IMPX-3.3
C7
10uF
+3V3
RFID SCANNER (WIEGAND)
X7-1
X7-2
X7-3
X7-4
X7-5
X7-6
D1_WALL
D0_WALL
LED_WALL
BUZZ_WALL
SCAN_LED_SIG
R17
2K2
T5
MMBT2222A
R18
220R
SCAN_BUZZ_SIG
R20
2K2
T6
MMBT2222A
R19
1R
R6
10k
R8
10k
BSS138
Q3
D0
D0_WALL
R7
10k
R9
10k
BSS138
Q5
D1
D1_WALL
ESP32
C1
10uF/6.3V/20%
C2
.1uF/10V/10%
RESET
ESP32
3V3
EN
TXD
RXD
LOAD
SHD
SWP
SCS
SCK
SDO
SDI
LED_2_SIG
LED_3_SIG
DATA_4
DATA_3
DATA_2
DATA_1
SCAN_LED_SIG
SCAN_BUZZ_SIG
CLOCK
LED_1_SIG
SENSOR_VP
SENSOR_VN
ESP-WROOM-03
R1
10k/1%
C3
.1uF/50V/10%
RESET
KSS-2EG4430
R2
470R/1%
C4
1nF/50V/10%
LOAD
KSS-2EG4430
R11
470R/1%
C5
1nF/50V/10%
LED CONNECTORS
R16
220
JST-XH-2
LED_1_SIG
1000
R3
T3
MMBT2222A
LED_2_SIG
R4
T1
MMBT2222A
LED_3_SIG
R12
T2
MMBT2222A
HX711 MODULES AND PADS
U$1
1X4_PADS_HX711
LOAD1
XFW-HX711
U$2
LOAD2
U$3
LOAD3
U$4
LOAD4
DATA_1
DATA_2
DATA_3
DATA_4
CLOCK
ESP 32 PIN BREAKOUTS
JP1
JP6
PROGRAM HEADER
PROGRAM