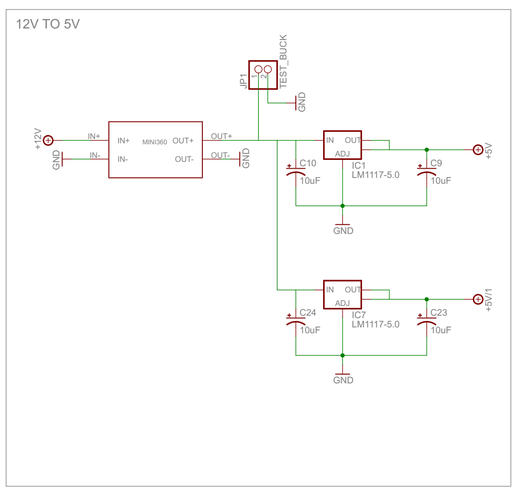
12V TO 5V
MINI360
IC1 LM1117-5.0
IC7 LM1117-5.0
C10 10uF
C9 10uF
C24 10uF
C23 10uF
+5V
+5V/1
TEST_BUCK

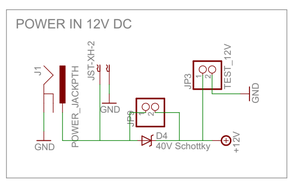
POWER IN 12V DC
POWER_JACKPTH
JST_XH-2
D4 40V Schottky
TEST_12V

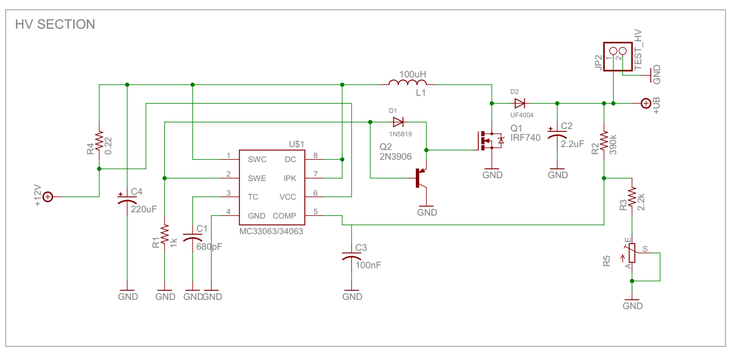
HV SECTION
100uH L1
Q1 IRF740
Q2 2N3906
MC33063/34063
C4 220uF
C1 680pF
C3 100nF
C2 2.2uF
R4 0.22
R1 1k
R2 33k
R3 2.2k
R5
TEST_HV

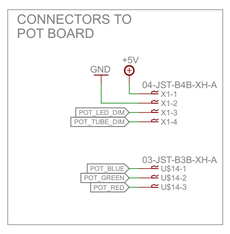
CONNECTORS TO
POT BOARD
04-JST-B4B-XH-A
03-JST-B3B-XH-A

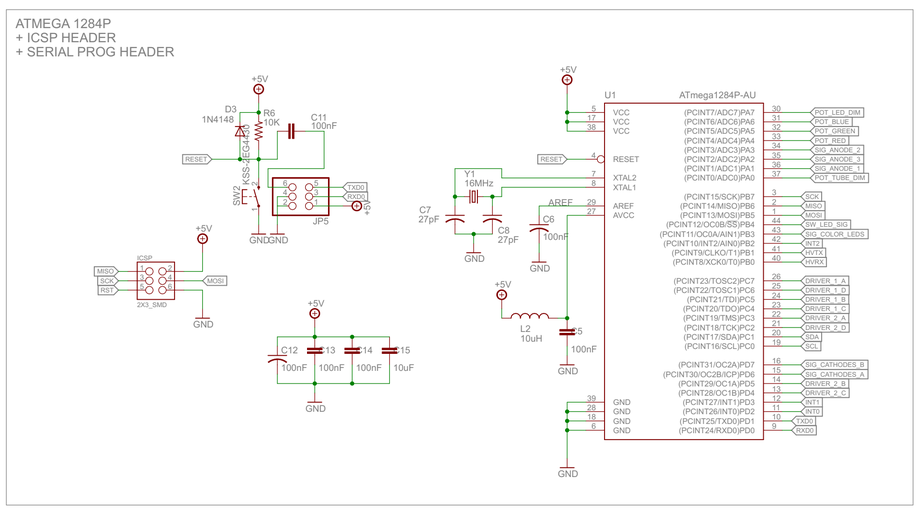
ATMEGA 1284P
+ ICSP HEADER
+ SERIAL PROG HEADER
ATmega1284P-AU
Y1 16MHz
JP5
ICSP
2X3_SMD

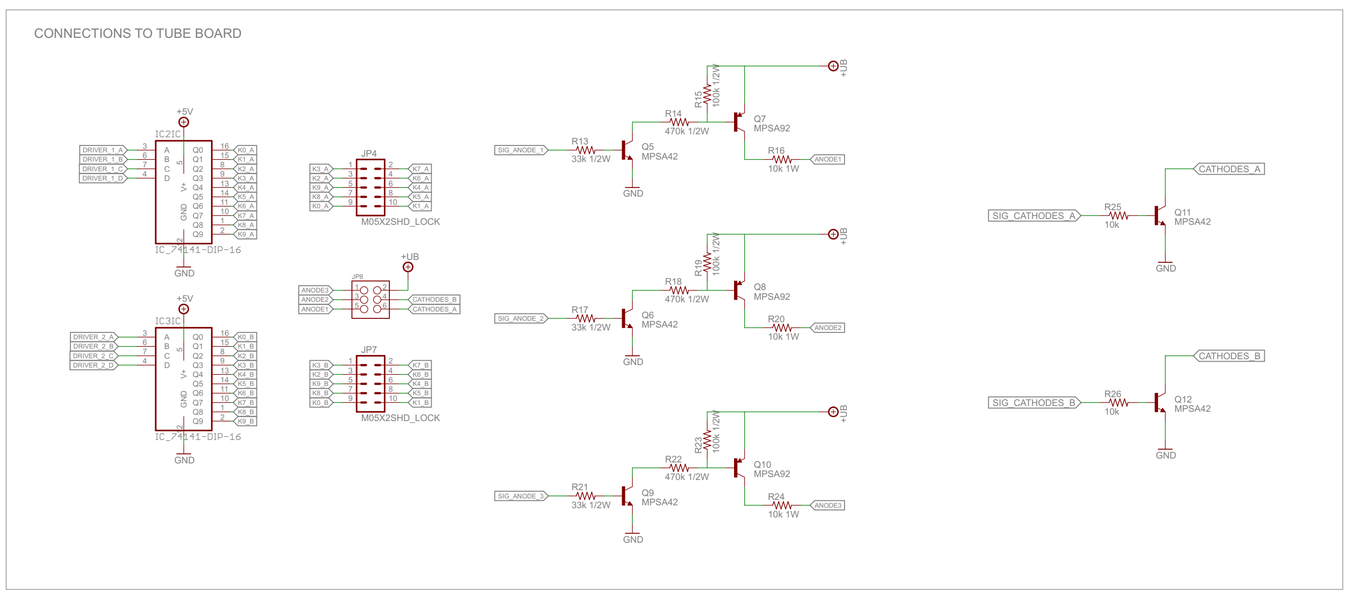
CONNECTIONS TO TUBE BOARD
IC_74141-DIP-16
M05X2SHD_LOCK
Q5 MPSA42
Q6 MPSA42
Q9 MPSA42
Q7 MPSA92
Q8 MPSA92
Q10 MPSA92
Q11 MPSA42
Q12 MPSA42
CATHODES_A
CATHODES_B
SIG_CATHODES_A
SIG_CATHODES_B

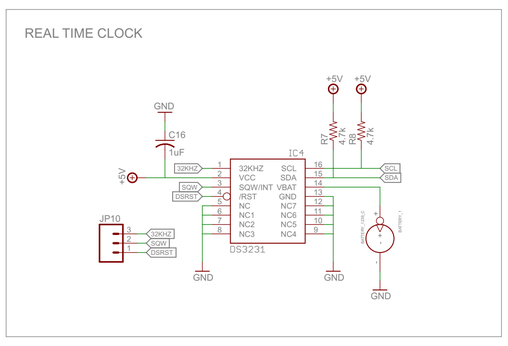
REAL TIME CLOCK
DS3231
IC4
JP10

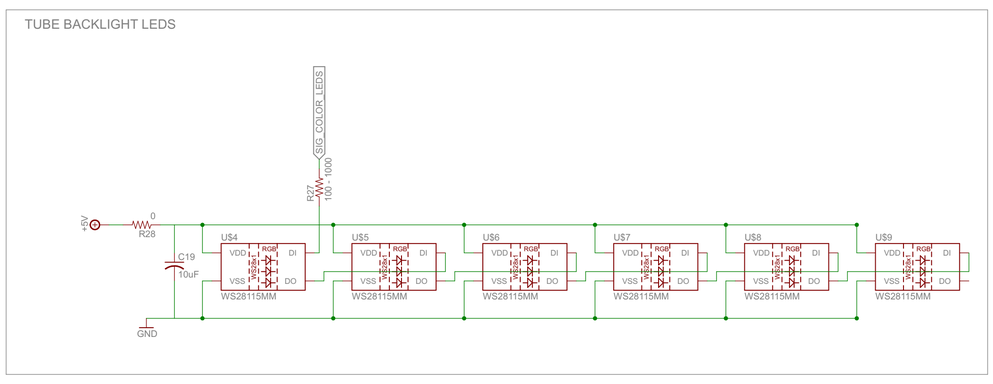
TUBE BACKLIGHT LEDS
SIG_COLOR_LEDS
WS28115MM

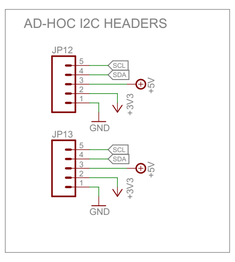
AD-HOC I2C HEADERS
JP12
JP13

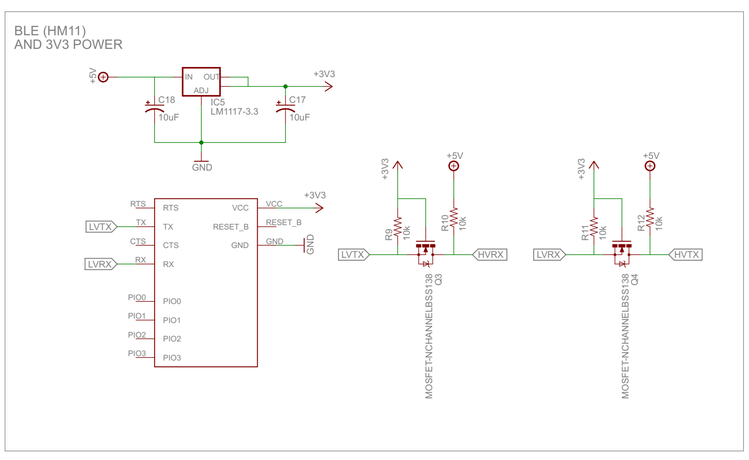
BLE (HM11)
AND 3V3 POWER
IC5 LM1117-3.3
MOSFET-N-CHANNEL-BSS138

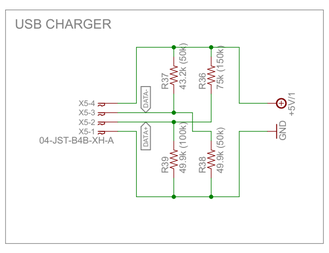
USB CHARGER
04-JST-B4B-XH-A

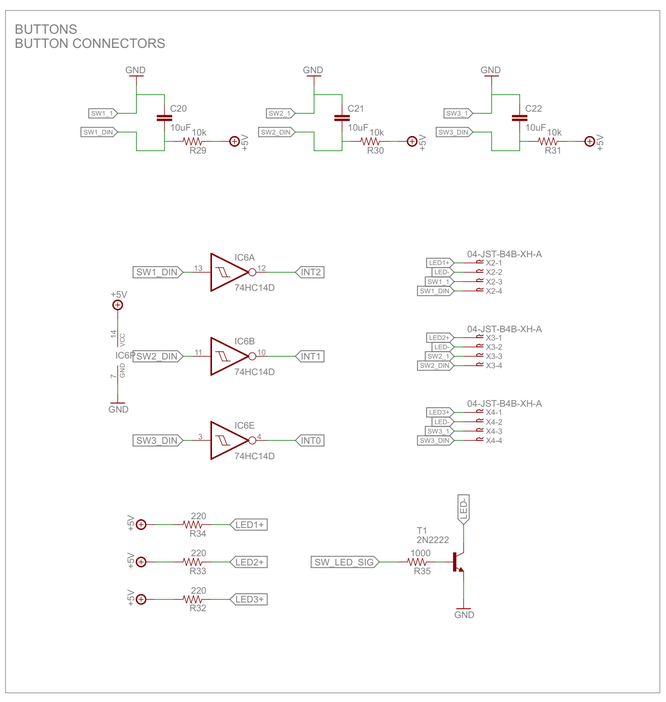
BUTTONS
BUTTON CONNECTORS
IC6A
IC6B
IC6E
74HC14D
04-JST-B4B-XH-A
T1 2N2222